RENHOTEC

INSTALLATION
INSTRUCTIONS

安　装　说　明　书

ST532000-A(B/C/D/E)-2.5(4/6) ST535000-A(B/C/D/E)-2.5(4/6) ST534000-A(B/C/D/E)-2.5(4/6)

Product Assembly Chart

产品总成图

• 产品名称 / Product name

360五芯连接器插座 **360 five pole connector socket**
360六芯连接器插头/插座 **360 five pole connector plug/socket**

• 产品型号 / Product model

ST532000-A(B/C/D/E)-2.5(4/6) ST535000-A(B/C/D/E)-2.5(4/6)
ST534000-A(B/C/D/E)-2.5(4/6)

Part One

Socket Installation

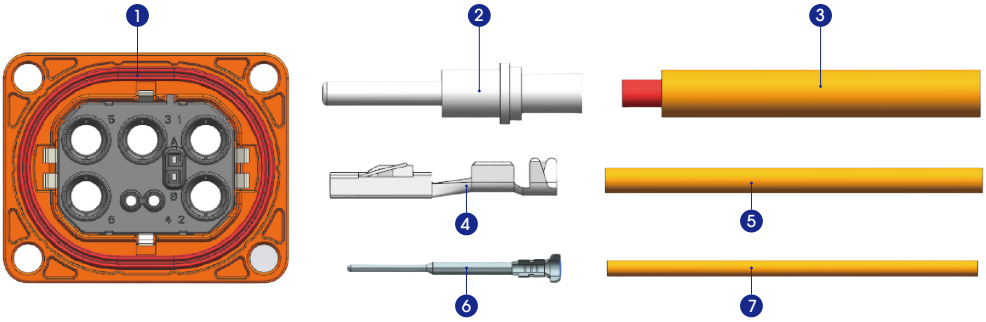

零件清单 / List of parts

1. 连接器主体 Connector body
2. 端子 terminals
3. 线束 harness
4. 信号端子 Signal terminals
5. 信号线束 Signal harness
6. 信号端子2 Signal terminals 2
7. 信号线束2 Signal harness 2

Steps1 / 步骤一

接线端子剥线,剥线尺寸6mm
Cable stripping, stripping size 6mm

Steps 2 / 步骤二

放入端子内，铆压端子

Insert the cable into the terminal and rivet the terminal

Steps 3 / 步骤三

放入信号端子内，铆压信号端子

Insert the cable into the signal terminal and rivet the signal terminal

Steps 4 / 步骤四

放入信号端子内，铆压信号端子

Insert the cable into the signal terminal and rivet the signal terminal

Steps 5 / 步骤五

将正负极端子、两种信号端子安装到主体内，安装到位

Install the positive and negative terminals and the two types of signal terminals into the main body and ensure they are in place

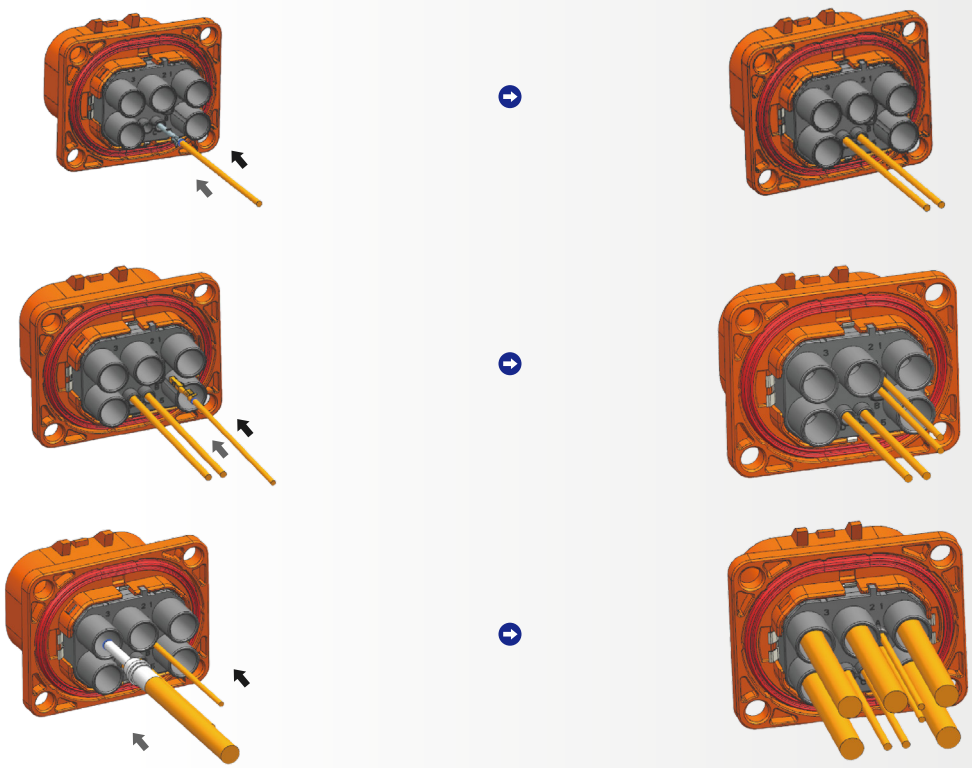

Part Two

Plug Installation

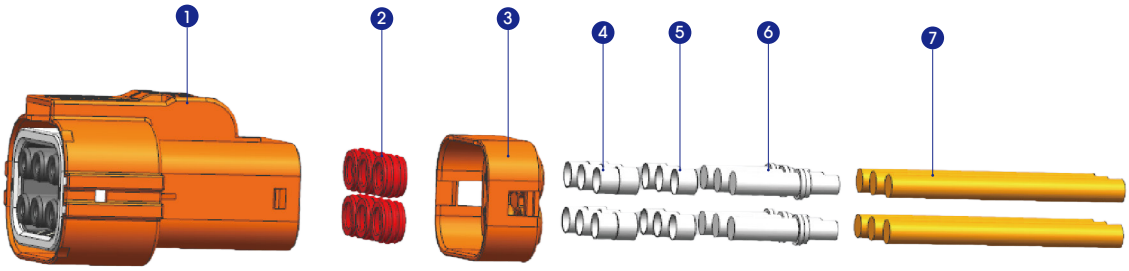

零件清单 / List of parts

1. 连接器主体 Connector body
2. 防水栓 Tailgte waterproofing plug
3. 尾盖 Tail cover
4. 屏蔽外环 Shielding outer ring
5. 屏蔽内环 Shielding inter ring
6. 端子 Terminals
6. 线束 Harness

Steps 1 / 步骤一

将电缆依次穿入尾盖和密封件

Thread the cables through the tail cover and the seal in sequence

Steps 2 / 步骤二

屏蔽线外层剥出25mm,裁短屏蔽线保留7mm

Peel off 25mm of the outer layer of the shielded wire and cut the shielded wire short to retain 7mm

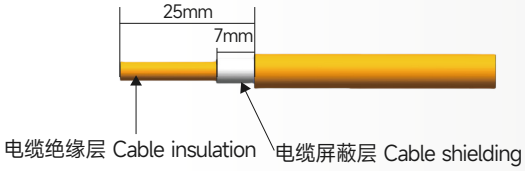

Steps 3 / 步骤三

放入屏蔽环内环.然后用预留的屏蔽线包住屏蔽环内环

Insert the inner ring of the shielding ring. Then cover the inner ring of the shielding ring with the reserved shielding wire

Steps 4 / 步骤四

放入屏蔽环外环.然后铆压（铆压尺寸7.5mm）

Insert the terminal into the main body and install it in place

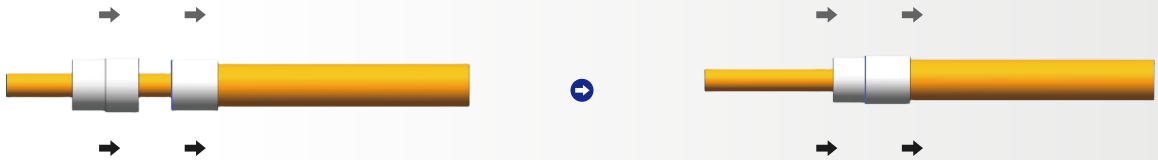

Steps 5 / 步骤五

接线端子剥线, 剥线尺寸6mm, 然后铆压端子

Strip the wiring terminal with a stripping size of 6mm, and then rivet the terminal

Steps 6 / 步骤六

将铆压后的端子装入护套主体中（安装时注意尾盖方向，如图所示）

Insert the riveted terminal into the main body of the sheath (pay attention to the direction of the tail cover during installation, as shown in the figure)

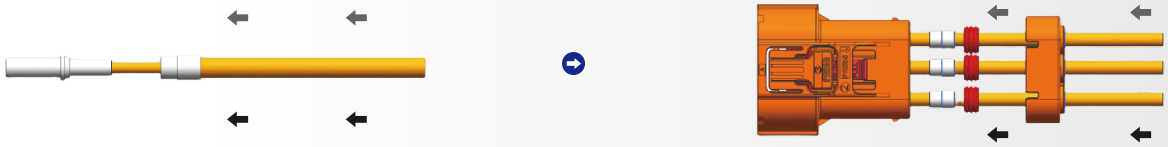

Steps 7 / 步骤七

端子安装到位后, 安装密封件 安装尾盖, 按压后有咔哒声即可

After the terminal is installed in place, install the sealing element and the tail cover.
After pressing, there will be a clicking sound.

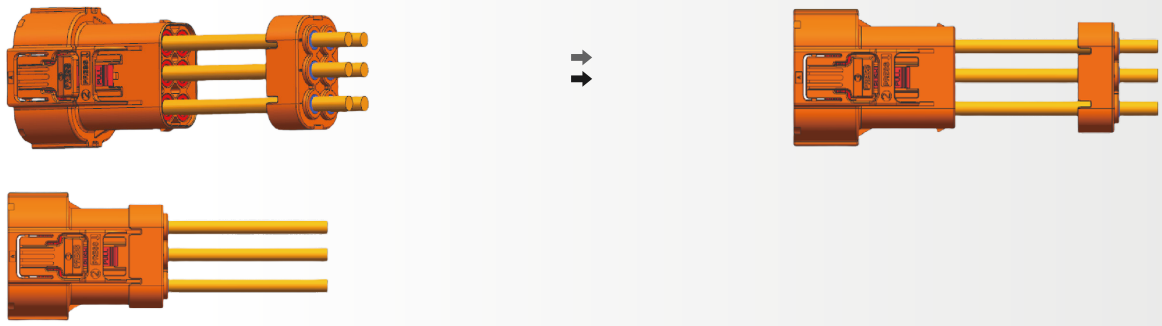

Part Three

Socket Installation

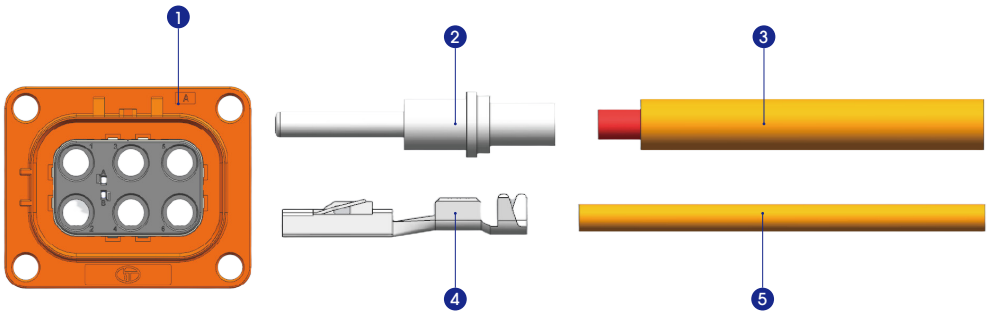

零件清单 / List of parts

1. 连接器主体 Connector body
2. 端子 Terminals
3. 线束 Harness
4. 信号端子 Signal terminals
4. 信号线束 Signal harness

Steps 1 / 步骤一

接线端子剥线,剥线尺寸6mm

Cable stripping, stripping size 6mm

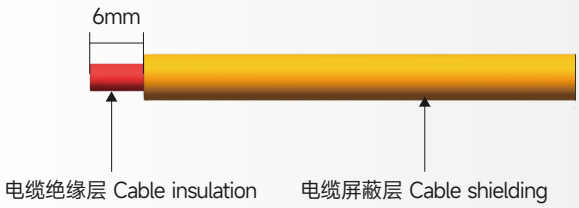

Steps 2 / 步骤二

放入端子内，铆压端子

Insert the cable into the terminal and rivet the terminal

Steps 3 / 步骤三

放入信号端子内，铆压信号端子

Insert the cable into the signal terminal and rivet the signal terminal

Steps 4 / 步骤四

将端子插入主体内，安装到位
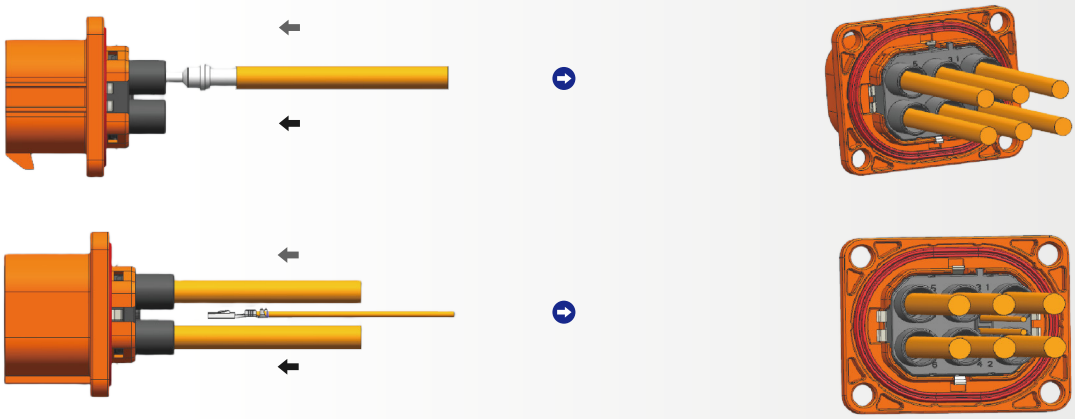
Insert the terminal into the main body and install it in place